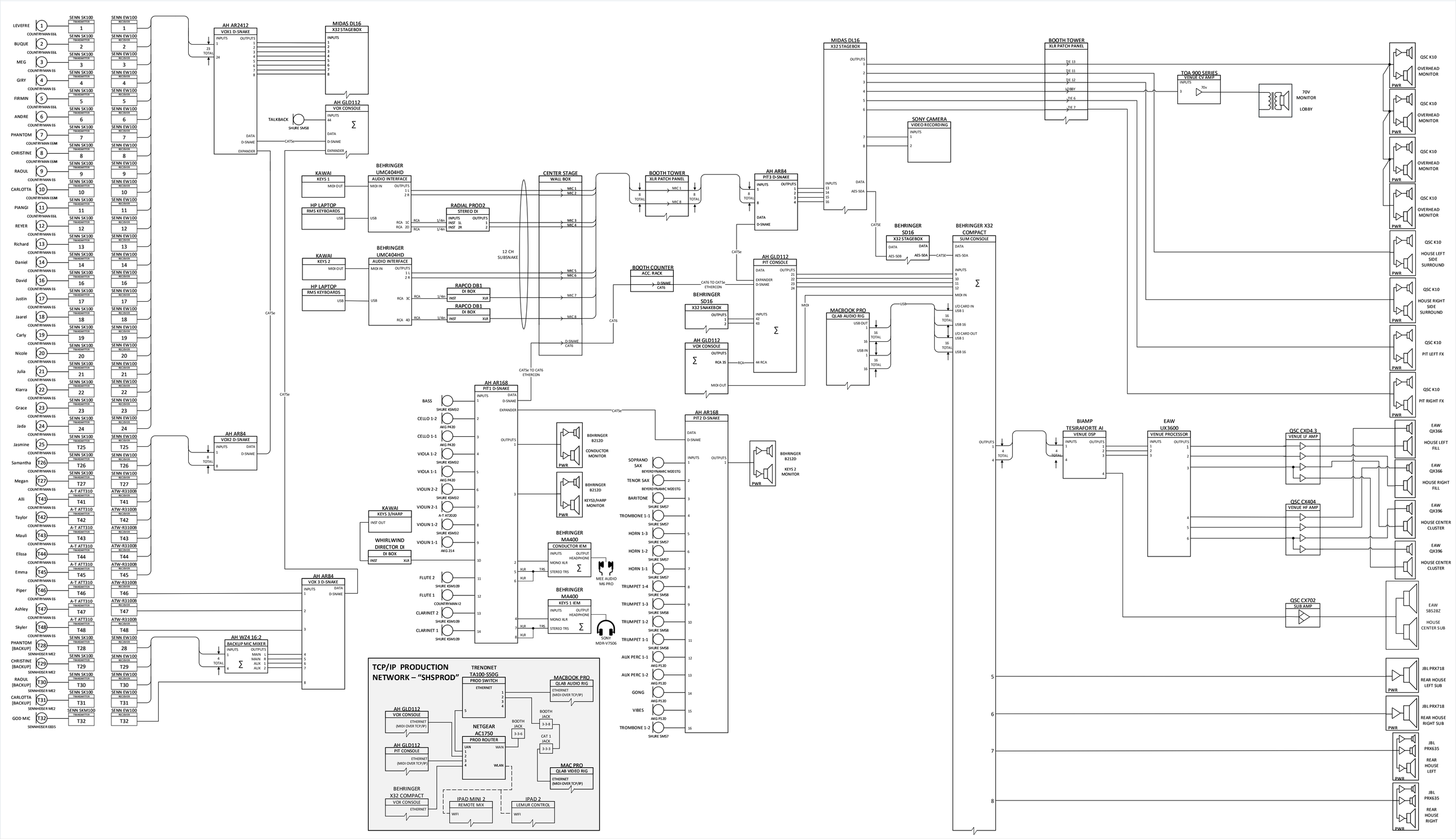
LEVEFRE
BUQUE
MEG
GIRY
FIRMIN
ANDRE
PHANTOM
CHRISTINE
RAOUL
CARLOTTA
PIANGI
REYER
Richard
Daniel
David
Justin
Jaarel
Carly
Nicole
Julia
Kiarra
Grace
Jada
Jasmine
Samantha
Megan
Alli
Taylor
Mauli
Elissa
Emma
Piper
Ashley
Skyler
PHANTOM [BACKUP]
CHRISTINE [BACKUP]
RAOUL [BACKUP]
CARLOTTA [BACKUP]
GOD MIC
SENN SK100
SENN EW100
SENN SKM100
A-T ATT310
ATW-R3100B
AH AR2412
VOX1 D-SNAKE
MIDAS DL16
X32 STAGEBOX
AH GLD112
VOX CONSOLE
TALKBACK
SHURE SM58
AH AR84
VOX2 D-SNAKE
AH AR84
VOX 3 D-SNAKE
AH WZ4 16:2
BACKUP MIC MIXER
KAWAI
KEYS 1
HP LAPTOP
RMS KEYBOARDS
BEHRINGER
UMC404HD
AUDIO INTERFACE
RADIAL PROD2
STEREO DI
KAWAI
KEYS 2
RAPCO DB1
DI BOX
CENTER STAGE
WALL BOX
12 CH SUBSNAKE
BOOTH TOWER
XLR PATCH PANEL
AH AR84
PIT3 D-SNAKE
BOOTH COUNTER
ACC RACK
AH GLD112
PIT CONSOLE
BEHRINGER
SD16
X32 SNAKEBOX
AH GLD112
VOX CONSOLE
AH AR168
PIT1 D-SNAKE
AH AR168
PIT2 D-SNAKE
BASS
SHURE KSM32
CELLO 1-2
AKG P420
CELLO 1-1
VIOLA 1-2
VIOLA 1-1
VIOLIN 2-2
VIOLIN 2-1
A-T AT2020
VIOLIN 1-2
VIOLIN 1-1
AKG 214
FLUTE 2
SHURE KSM109
FLUTE 1
COUNTRYMAN I2
CLARINET 2
CLARINET 1
BEHRINGER B212D
CONDUCTOR MONITOR
KEYS3/HARP MONITOR
KAWAI
KEYS 3/HARP
WHIRLWIND
DIRECTOR DI
BEHRINGER
MA400
CONDUCTOR IEM
MEE AUDIO M6 PRO
KEYS 1 IEM
SONY MDR-V7506
SOPRANO SAX
BEYERDYNAMIC M201TG
TENOR SAX
BARITONE
SHURE SM57
TROMBONE 1-1
HORN 1-3
HORN 1-2
HORN 1-1
TRUMPET 1-4
SHURE SM58
TRUMPET 1-3
TRUMPET 1-2
TRUMPET 1-1
AUX PERC 1-1
AKG P120
AUX PERC 1-2
GONG
VIBES
TROMBONE 1-2
BEHRINGER B212D
KEYS 2 MONITOR
MIDAS DL16
X32 STAGEBOX
SONY CAMERA
VIDEO RECORDING
BEHRINGER
SD16
X32 STAGEBOX
BEHRINGER X32 COMPACT
SUM CONSOLE
MACBOOK PRO
QLAB AUDIO RIG
BOOTH TOWER
XLR PATCH PANEL
TOA 900 SERIES
VENUE CV AMP
70V MONITOR
LOBBY
QSC K10
OVERHEAD MONITOR
HOUSE LEFT SIDE SURROUND
HOUSE RIGHT SIDE SURROUND
PIT LEFT FX
PIT RIGHT FX
BIAMP
TESIRAFORTE AI
EAW
UX3600
VENUE PROCESSOR
QSC CXD4.3
VENUE LF AMP
QSC CX404
VENUE HF AMP
QSC CX702
SUB AMP
EAW QX366
HOUSE LEFT FILL
HOUSE RIGHT FILL
EAW QX396
HOUSE CENTER CLUSTER
EAW SB528z
HOUSE CENTER SUB
JBL PRX718
REAR HOUSE LEFT SUB
REAR HOUSE RIGHT SUB
JBL PRX635
REAR HOUSE LEFT
REAR HOUSE RIGHT
TCP/IP PRODUCTION NETWORK – "SHSPROD"
TRENDNET
TA100-S50G
PROD SWITCH
MACBOOK PRO
QLAB AUDIO RIG
AH GLD112
VOX CONSOLE
AH GLD112
PIT CONSOLE
NETGEAR
AC1750
PROD ROUTER
BOOTH JACK
CAT 1 JACK
MAC PRO
QLAB VIDEO RIG
BEHRINGER
X32 COMPACT
VOX CONSOLE
IPAD MINI 2
REMOTE MIX
IPAD 2
LEMUR CONTROL